SPECIFICATION APPLIED

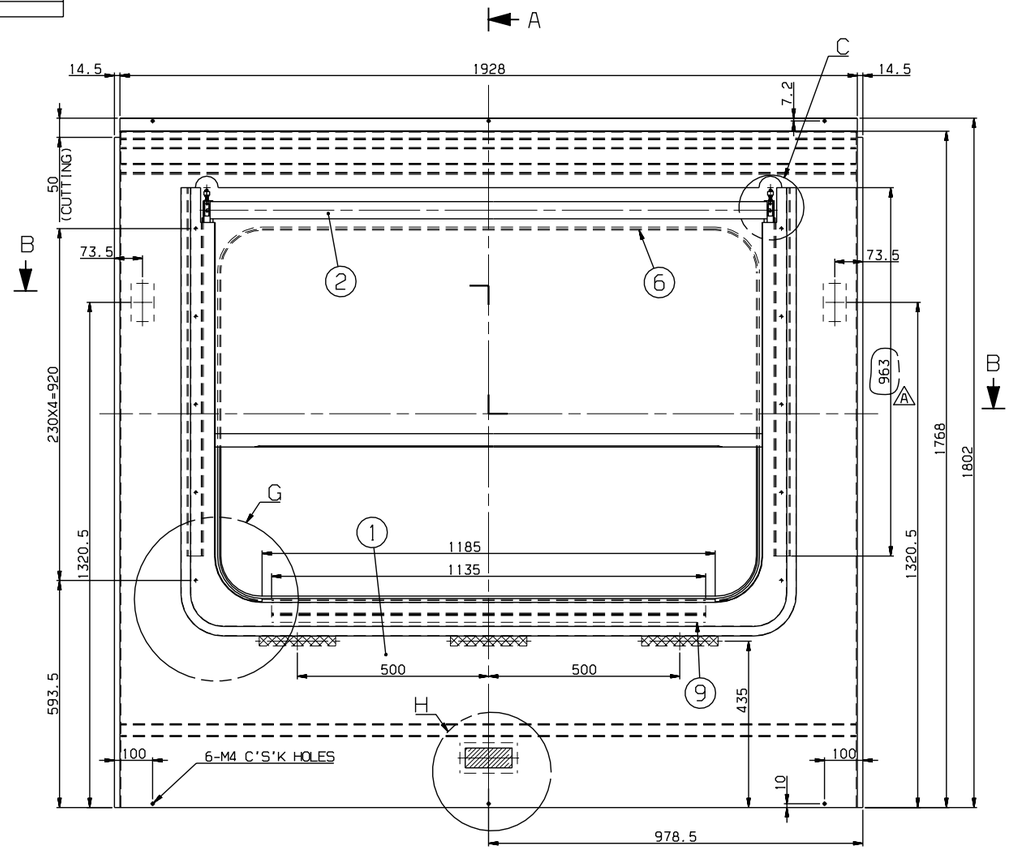

SECTION A-A

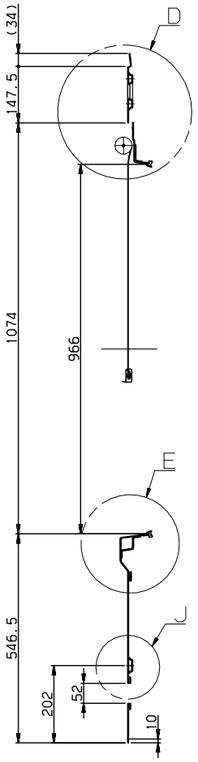

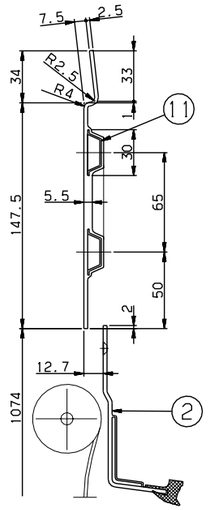

DETAIL D
SCALE=1/2

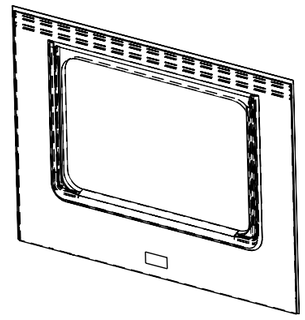

ISO VIEW

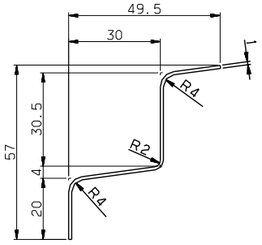

DETAIL #9
SCALE=1/1

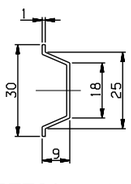

DETAIL #11
SCALE=1/1

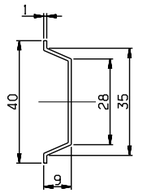

DETAIL #10
SCALE=1/1

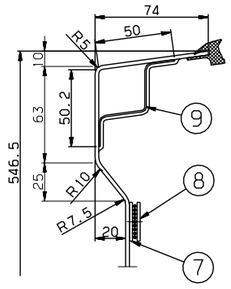

DETAIL E
SCALE=1/2

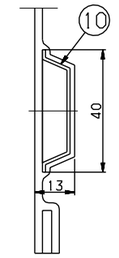

DETAIL J
SCALE=1/1

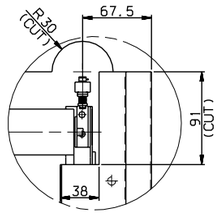

DETAIL C
SCALE=1/3

NOTE

1. AN INTERIOR PANEL'S COLOR(RAL 7047) AND SURFACE SHALL BE MANUFACTURED AFTER SAMPLE'S APPROVAL BY CUSTOMER
2. PART 6 SHALL BE CUT ADEQUATELY AND USED
3. PART 2 SHALL BE WELL OPERATED UNDER CONDITION OF ASSEMBLY
4. PART 7 SHALL BE FIXED ON THE PART 1, AND PART 8 SHALL BE DELIVERED SEPERATETLY
5. THE INTERFACE BETWEEN PART 1 AND PART 2 SHALL BE STRONGLY SEALED
6. (A) PART 4 SHOULD BE APPLIED WITH PART 13.

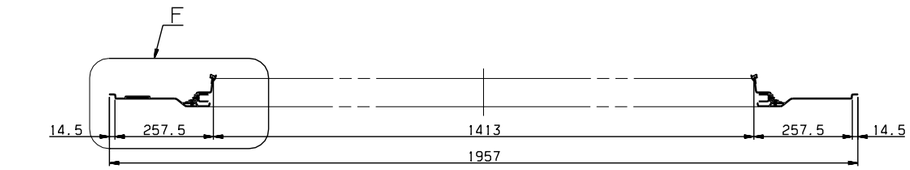

SECTION B-B

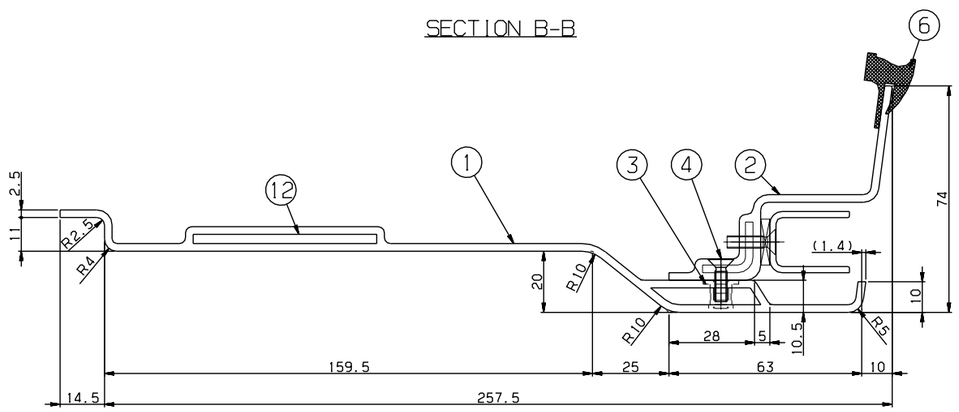

DETAIL F
SCALE=1/1

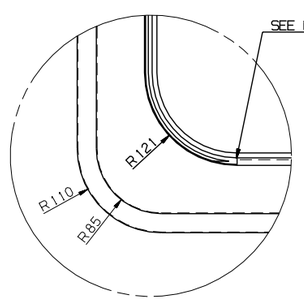

DETAIL G
SCALE=1/4

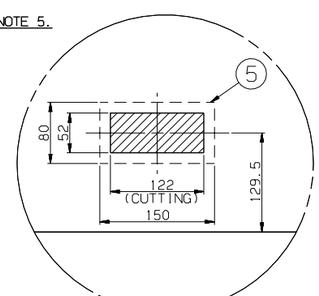

DETAIL H
SCALE=1/4

품번 NO.	부품 번호 PART NO.	품명 DESCRIPTION	재질 MATERIAL	수량 Q'TY	중량 W.T	비고 REMARKS
(A) 13	CP910004-406	ADHESIVE	ASSY	1		LOCTITE 242
12	RFP51132EJ0-012	SEAT,TAP	SUS304	2		PL T3x60x100
11	RFP51132EJ0-011	STIFFENER	A1050P	2		T1
10	RFP51132EJ0-010	STIFFENER	A1050P	1		T1
9	RFP51132EJ0-009	STIFFENER	SUS304	1		T1,L=1135
8	RFP51132EJ0-008	DUAL_LOCK,FASTENER	ASSY	3		3M,SJ-3550 L=200(DUAL TAPE)
7	RFP51132EJ0-007	DUAL_LOCK,FASTENER	ASSY	3		3M,SJ-3551 L=200(DUAL TAPE)
6	RFP51132EJ0-006	RUBBER,SECTION	ASSY	1		RFP51011ANO,L=4600
5	RFP51132EJ0-005	SEAT,TAP	SUS304	1		PL T3x150x80
4	RS60607-098S	SCREW,F.H	SUS304	10		M4x14
3	RFP51132EJ0-003	NUTSERT	SUS304	10		M4
2	RFP51009AN0	PANEL,BLIND WINDOW	ASSY	1		
1	RFP51132EJ0-001	PANEL	FRP	1		T2.5

기 술 MARK	일 자 DATE	변 경 내 역 DETAIL OF REVISION(E.C ZONE)	설변번호 E.C NO.	설계 DGN	검도 CHK	승인 APP
Ax3	2014.12.18	ADDED PART NO. #13 & DIMENSION	RSD1402-U071	H.U.LEE	K.B.PARK	J.Y.LEE

승인 APP	JeongYul Lee 2014.10.16	재질 MAT'L	ASSY
검도 CHK	KeongBong Park 2014.10.16	품중량 G.W	
설계 DGN	HeonUk Lee 2014.10.16	일반공차 MC / WD / CT	B / B / B
제도 DRG	HeeSook Jeong 2014.10.16	SIZE	A1

도면 명칭 TITLE: WINDOW,MASK,TYPE AA

도번 DRG. NO: RFP51132EJ0 | Ver. 00 | Rev. -A | RSD1402

SCALE 1/8 | 매수 SHEET 1 of 1 | RFP-

참조 REF. NO.

HYUNDAI Rotem 현대로템주식회사

일반공차 GENERAL TOLERANCE			
주조 CASTING	~ 40	2	4
	~ 30	2	3
	~ 10	1	1.5
프레스	< 1	0.5	1
절삭 MACHINING	~ 3150	-	7
	~ 1600	4	5
	~ 800	3	4
	~ 400	2	3
	~ 200	1.5	2
	~ 100	1	1.5
틈새 GAP		A	B
주철, 주강품 CASTING (±)			
	~ 20M	8	14 24
	~ 15M	7	12 21
	~ 12M	6	10 18
	~ 8M	5	8 14
	~ 4M	4	6 11
	~ 2M	3	4 8
	~ 1M	2	3 6
	~ 315	1	2 4
	~ 120	1	2 3
	~ 30	1	1 1
틈새 GAP		A	B C
용접 구조물 WELDING (±)			
	~ 20M	-	6.0 8.0
	~ 15M	-	5.0 7.0
	~ 12M	-	4.0 6.0
	~ 8M	-	3.0 5.0
	~ 4M	0.8	2.0 4.0
	~ 2M	0.5	1.2 3.0
	~ 1M	0.3	0.8 2.0
	~ 315	0.2	0.5 1.2
	~ 120	0.15	0.3 0.8
	~ 30	0.1	0.2 0.5
틈새 GAP	~ 6	0.05	0.1 0.2
	~ 100	A	B C
기계 가공품 MACHINING (±)			
주단부분은 별도표시함 GENERAL TOLERANCE			

본 도면은 당사 재산권에 속하므로 무단복사/배포 금지. PROPERTY OF ISSUING ENTITY, CANNOT BE DISTRIBUTED OR REPRODUCED WITHOUT AUTHORIZATION.

CATIA